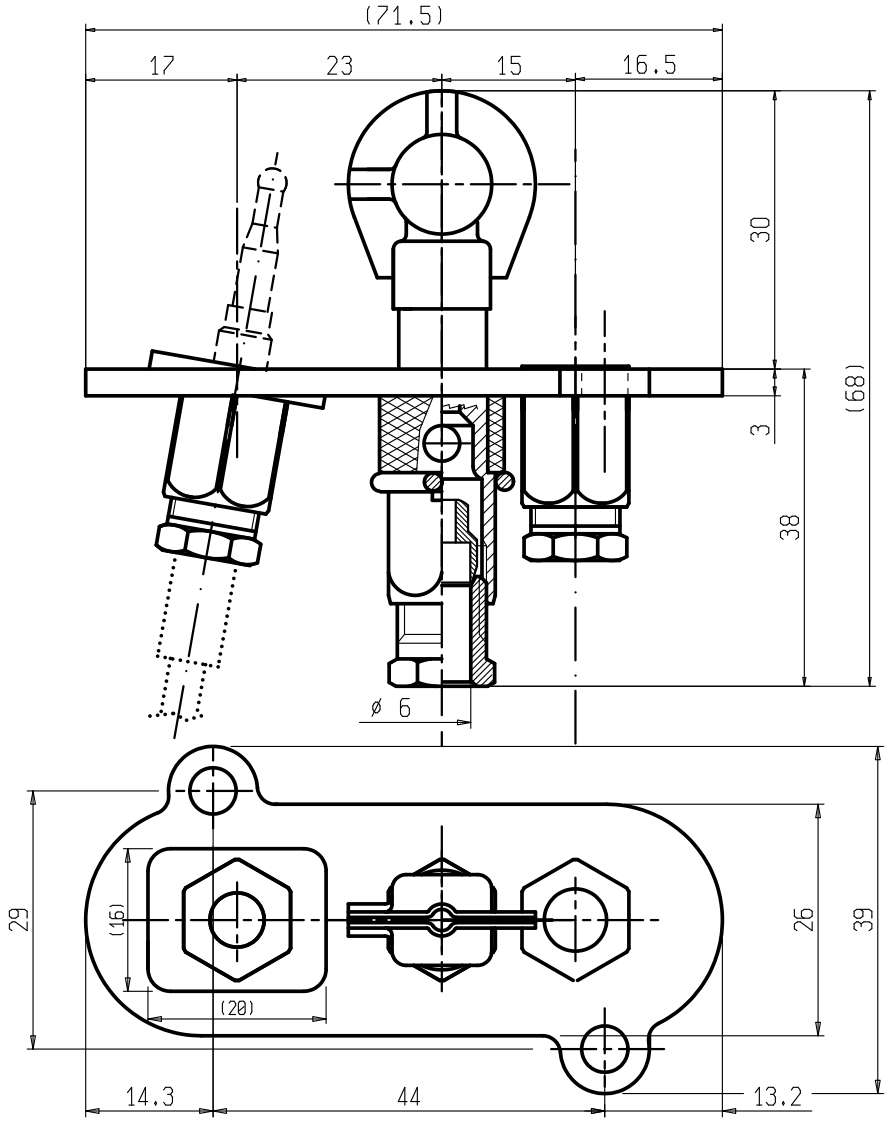

INCLUDED:

INJECTOR 0977118 (Marked 41)

MUST BE USED: THE SPARK ELECTRODE 0915024 OR 0915025
THE THERMOCOUPLE WITH TARGET SLEEVE

(NATURAL GAS)

DIMENSIONS BETWEEN [...] ARE IN INCHES DIMENSIONS WITHOUT TOLERANCE ARE INDICATIVE

MODIFICATION				
Rev.	Mod.N°	Date	Description	Name

Drawn	11/06/07	Mingardo	Description PILOT TWO FLAME VERTICAL	Release Level
	Date	Name	Technical Information	
			Material	Scale 2:1 ISO
Q =			Material Condition	
			Heat Treatment	Replaces Dwg N°
			Surface Treatment	I.M. Frm. A3
			Sealing Surface · · · · · · · Surface Hardness	
				Sit Drawing N° 0160027 Rev.

This drawing may not be copied or disclosed to third person without permission of SIT. We are the owner of this drawing.

SIT La Precise S.p.A.
35129 Padova (Italy) Viale dell'Industria 31/33

NOME FILE (.DRW)