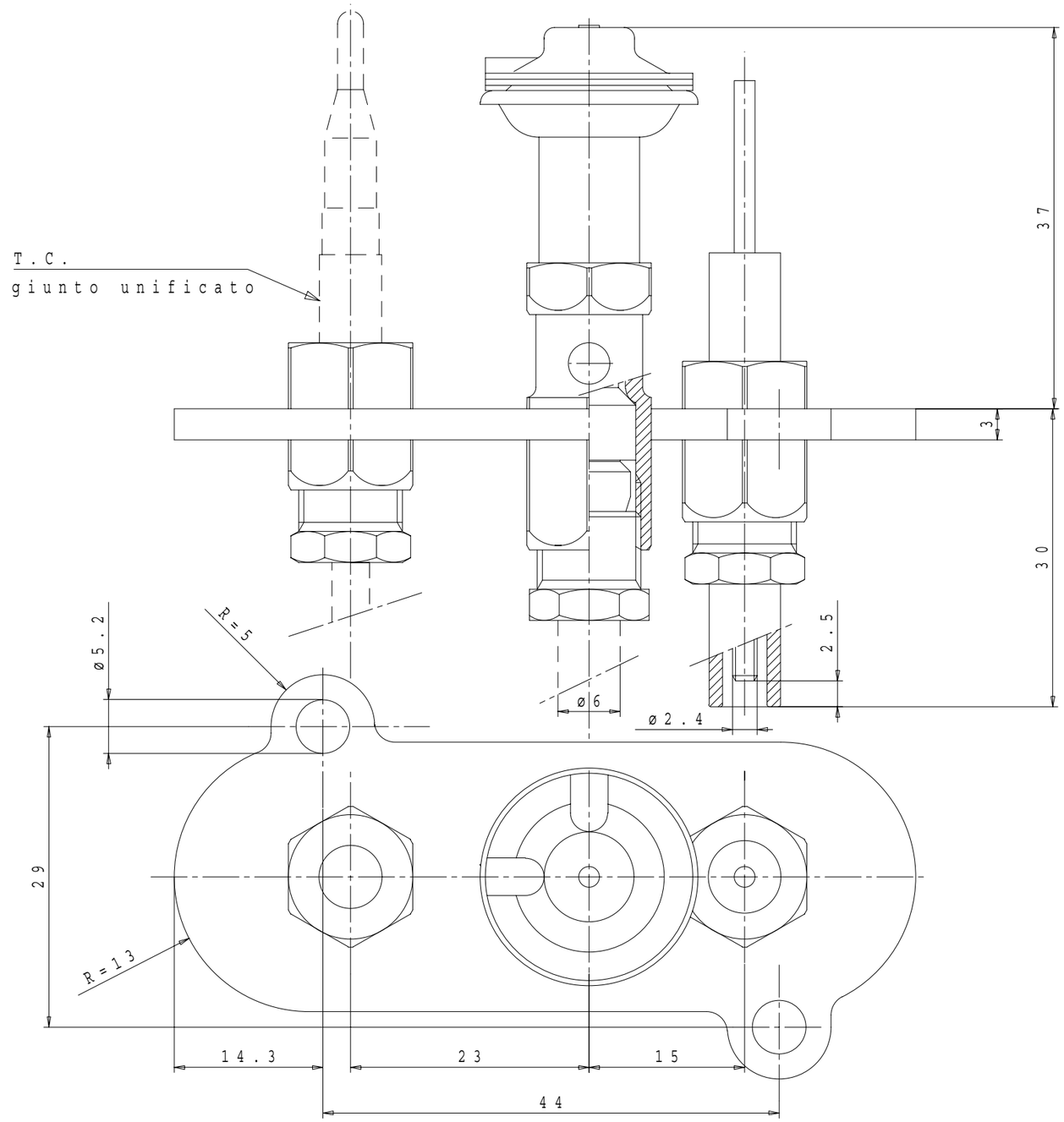

DIMENSIONS BETWEEN [...] ARE IN INCHES DIMENSIONS WITHOUT TOLERANCE ARE INDICATIVE

Rev.	Mod.N°	Date	Description	Name

MODIFICATION

Drawn	07-12-00	SAMPERI	Description: PILOTA A DUE VIE (41)
	Date	Name	Technical Information
			Material
			Material Condition
			Heat Treatment
			Surface Treatment
			Sealing Surface · · · · · · · · · Surface Hardness

Release Level

Scale 2 : 1 ISO

Replaces Dwg N°

I.M. Frm. A3

Sit Drawing N° 0160059 Rev.

This drawing may not be copied or disclosed to third person without permission of SIT. We are the owner of this drawing.

SIT La Precisa S.p.A.
35129 Padova (Italy) Viale dell'Industria 31/33

NOME FILE (.DRW) 0160059D