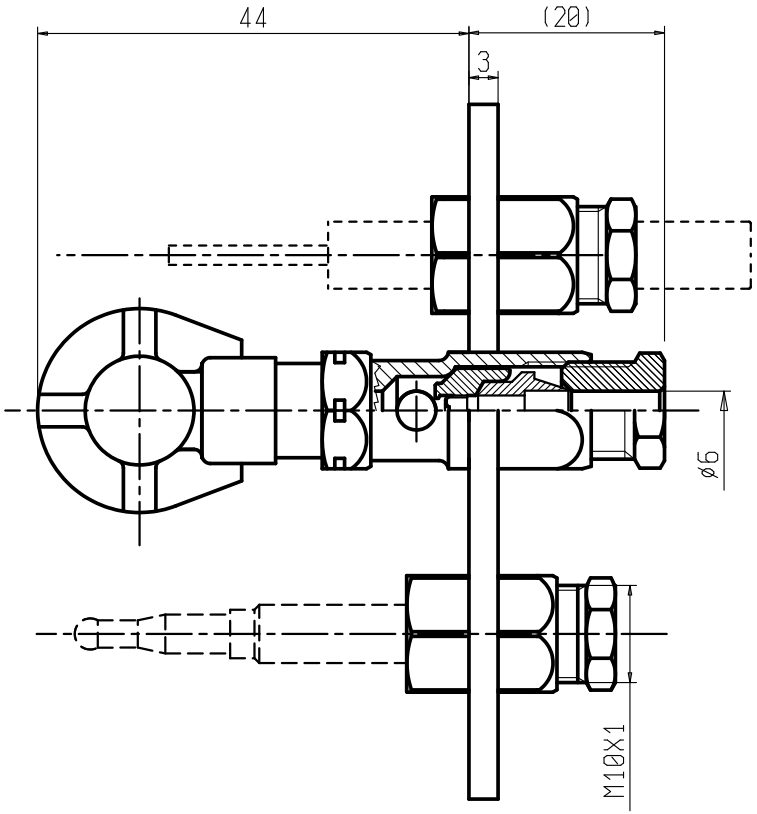

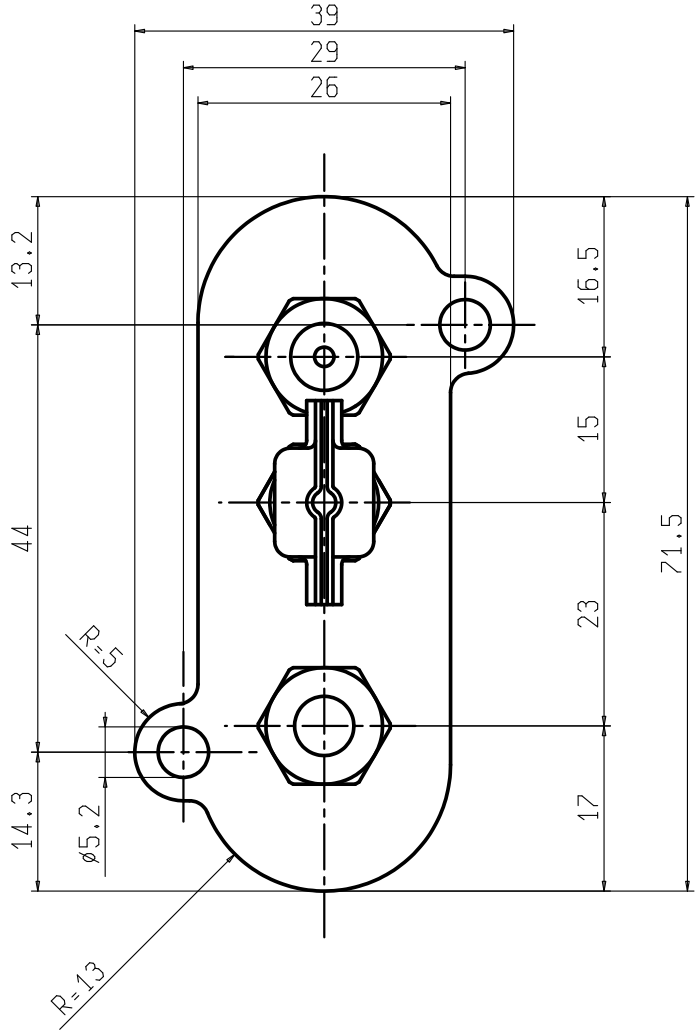

DIMENSIONS BETWIN [...] ARE IN INCHES
DIMENSIONS WITHOUT TOLERANCE ARE INDICATIVE

NOME FILE (.DRW)

MODIFICATION				
Rev.	Mod.N°	Date	Description	Name

Drawn	25/09/06	Mingardo	Description PILOTA 3F VERTICALE	Release Level
	Date	Name	Technical Information	
			Material	Scale 2:1 ISO
			Material Condition	
			Heat Treatment	Replaces Dwg N°
			Surface Treatment	I.M. Frm. A3
			Sealing Surface · · · · · · · Surface Hardness	
				Sit Drawing N° 0160118 Rev.

This drawing may not be copied or disclosed to third person without permission of SIT. We are the owner of this drawing.

SIT La Precise S.p.A.
35129 Padova (Italy) Viale dell'Industria 31/33