This plan belongs to Polidoro spa and it is the expression of all secret inventions, processes of manufacture and know-how invented or developed by the said company. Therefore, according to the Italian law (art.c.p. R.D.1127/39) you shall use and employ this plan only to the necessary extent in order to perform the order received by Polidoro spa and disclose it only to such of your employees as may be necessary to do so. Any unauthorised, different direct or indirect use shall represent a breach.

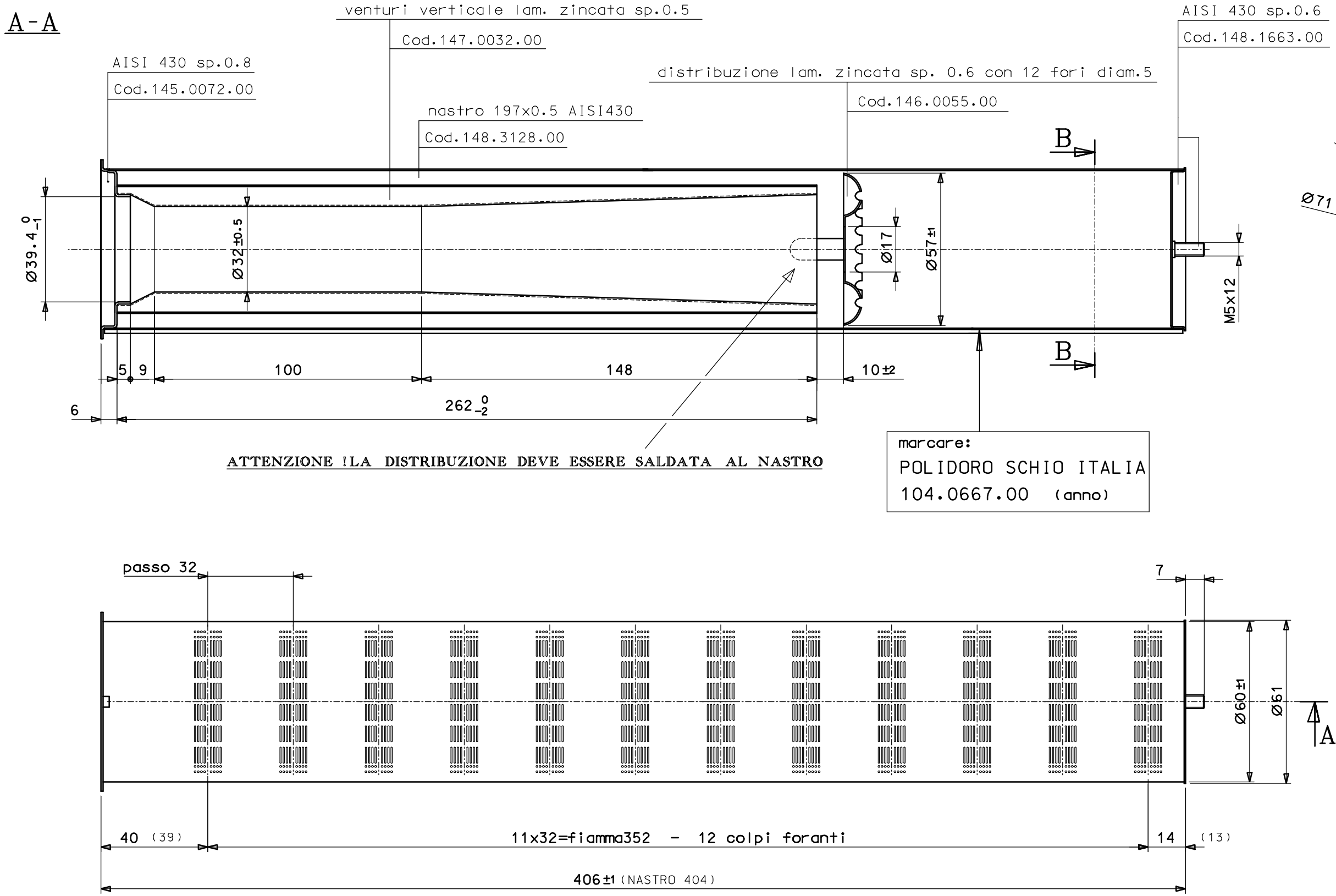

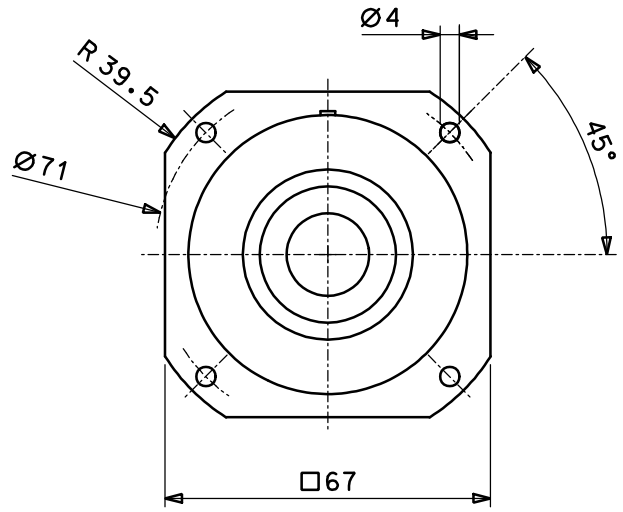

Colpo forante
scala 2/1

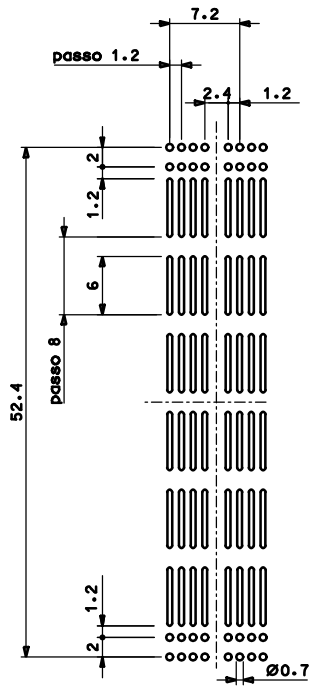

Sez.d'uscita:153.7mm²
Sez.totale:1844.4mm²

PARTICOLARE "X" SCALA 2:1

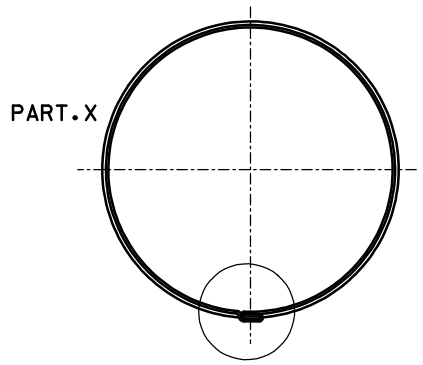

B-B

Rev.	Modifiche	data	dis.	visto
	EMISSIONE	10/03/06	Pozzan	

materiale | dimensione | scala: | Formato A2
peso | note

bruciatore multigas

23 Kw

Quote senza tolleranza

0.5 ...3	> 3 ...6	> 6 ...30	> 30 ..120	> 120 ..400	> 400 ..1000
± 0.2	± 0.3	± 0.5	± 0.8	± 1.2	± 2

Rotondita' smussi

± 0.4	± 1	± 2	± 2	± 2	± 2

Angolo,quota del lato piu' corto

fino a 10	> 10 ...50	> 50 ...120	> 120 ...400	> 400
±1°30	± 1 °	±0°30	±0°15	± 0°10

Tolleranze di forma e posizione ISO 2768-c ISO E

Cod.N° 104.0667.00

POLIDORO S.p.A