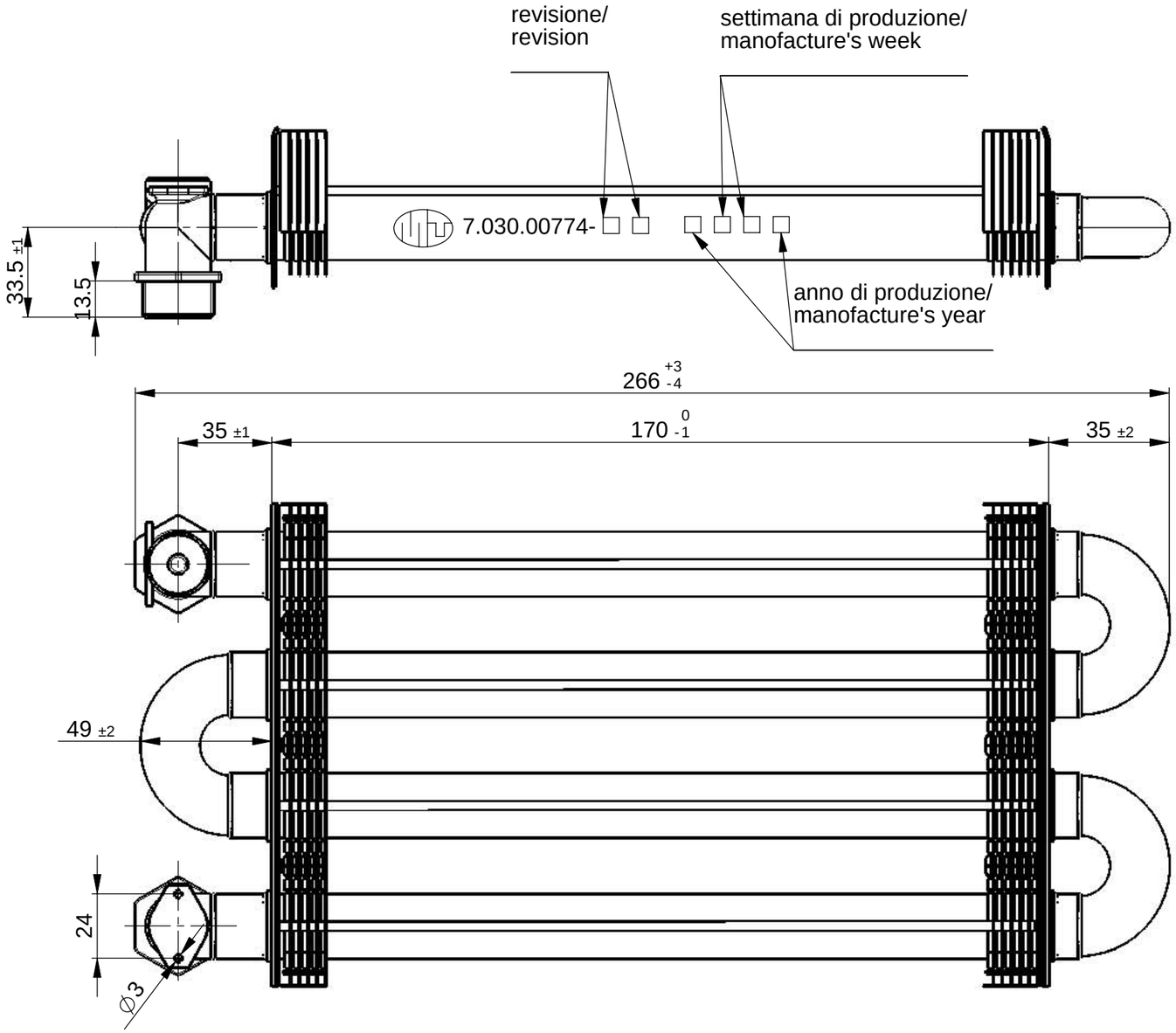

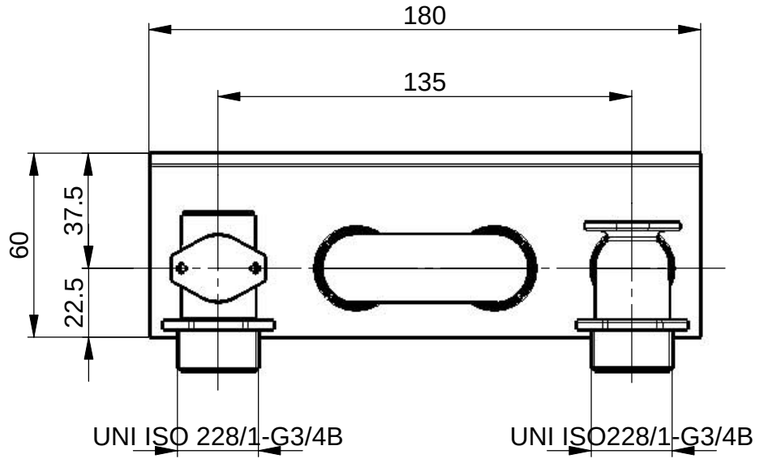

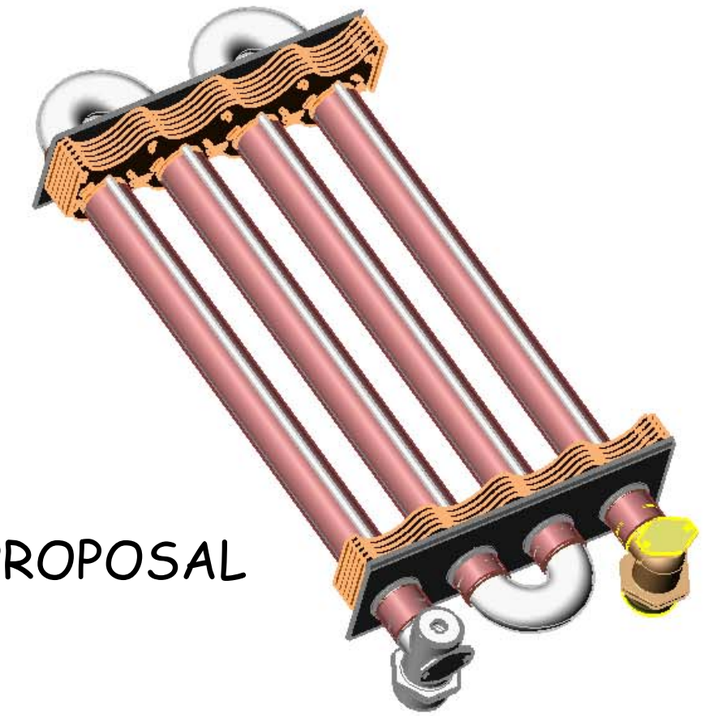

PROPOSAL

CARATTERISTICHE IDRAULICHE/ HYDRAULIC CARACTERISTICS
Pressione di collaudo/ test pressure: 7 bar a/at 20°c
Pressione di esercizio/ operating pressure: 3 bar a/at 93°C

MATERIALI/ MATERIALS
Tubi/ Tubes: EN 12449-Cu-DHP
N°51 Alette intermedie/ N°51 intermedie fins: EN 1652-Cu-DHP
Alette di testa/ end fins: EN 10130-DC 02
Raccordi/ connections: EN 12165:98-CW617N

VERNICE SILICONICA ALLUMINIO PER ALTE TEMPERATURE

MODIFICHE
ALTERATIONS

SCALA / SCALE		VALORI ANGOLARI / ANGULAR VALUES ±30'						MATARIALE / MATERIAL	DISEGN. / DRAW DALLA BARBA	DATA / DATE 05/03/2009
TOLLERANZE GENERALI / GENERAL TOLERANCES		fino a 3	> 3 a 6	> 6 a 30	> 30 a 120	> 120 a 400	> 400 a 1000		CONTR. / CHECK	DATA / DATE 31/12/1999
PLASTICA / PLASTIC		±0.15	±0.17	±0.25	±0.4	±1	±2.5			
METALLO / METAL		±0.05	±0.05	±0.1	±0.15	±0.2	±0.3	TRATT. TERMICO E/O SUPERF. / HEAT/SUPERFICIAL TREATMENT	CORRISPONDE A/CORRESPONDS TO	
METALLO / METAL		±0.1	±0.1	±0.2	±0.3	±0.5	±0.8	VERNICIATO	SOSTITUISCE IL/SUBSTITUTES	
METALLO / METAL	X	±0.2	±0.3	±0.5	±0.8	±1.2	±2		SOSTITUITO DA/SUBSTITUTED BY	

mut meccanica tovo
MONTECCHIO MAGGIORE
36075 (VI) ITALY

SM4C24 CGBG
170 35 W 35 I 51

Refered to law terms, MUT SpA reserves the ownership on this drawing and prohibits to reproduce or communicate it without authorization

DISEGNO / DRAWING
7.030.00774-00

DIMENSIONI IN mm
DIMENSIONS IN mm